Map	Lot	Sublot	Building	Unit	CARD
162	44	0			1 of 1

RESIDENTIAL

Town Of Lincoln

	Total Card	/	Total Parcel
APPRAISED:	2,364,800	/	2,364,800
USE VALUE:	2,364,800	/	2,364,800
ASSESSED:	2,364,800	/	2,364,800

PROPERTY LOCATION

No	Alt No	Direction/Street/City
127		LINCOLN RD, LINCOLN

OWNERSHIP

Unit #:

Owner 1:	SANDERSON IAN C
Owner 2:	SANDERSON ANNE LH
Owner 3:	
Street 1:	127 LINCOLN RD
Street 2:	
Twn/City:	LINCOLN
St/Prov:	MA Cntry Own Occ: Y
Postal:	01773-3812 Type:

PREVIOUS OWNER

Owner 1:	SANDERSON - IAN C
Owner 2:	SANDERSON - ANNE LH
Street 1:	127 LINCOLN RD
Twn/City:	LINCOLN
St/Prov:	MA Cntry
Postal:	01773-3812

NARRATIVE DESCRIPTION

This parcel contains 8.567 ACRES of land mainly classified as ONE FAM with a COLONIAL Building built about 1993, having primarily CLAPBOARD Exterior and 5591 Square Feet, with 1 Unit, 4 Baths, 0 3/4 Bath, 1 HalfBath, 13 Rooms, and 6 Bdrms.

OTHER ASSESSMENTS

Code	Descrip/No	Amount	Com. Int

PROPERTY FACTORS

Item	Code	Description	%	Item	Code	Description
Z	R-1	Single Fam	100	water		
o				Sewer		
n				Electri		
Census:				Exmpt		
Flood Haz:						
D				Topo		
s				Street	1	PAVED
t				Gas:	4	MEDIUM

IN PROCESS APPRAISAL SUMMARY

Use Code	Land Size	Building Value	Yard Items	Land Value	Total Value
101	8.567	1,327,300	32,000	1,005,500	2,364,800
Total Card	8.567	1,327,300	32,000	1,005,500	2,364,800
Total Parcel	8.567	1,327,300	32,000	1,005,500	2,364,800

Source: Market Adj Cost | Total Value per SQ unit /Card: 422.95 | /Parcel: 422.95

Legal Description

Entered Lot Size
Total Land:
Land Unit Type:

User Acct
GIS Ref
GIS Ref
Insp Date 04/27/17

Patriot Properties Inc.

PREVIOUS ASSESSMENT

Parcel ID 162 44 0

!2113!

Tax Yr	Use	Cat	Bldg Value	Yrd Items	Land Size	Land Value	Total Value	Asses'd Value	Notes	Date
2025	101	FV	1,287,100	29900	8.567	977,500	2,294,500		Year End Roll	12/2/2024
2024	101	FV	1,238,100	29900	8.567	952,400	2,220,400		Year end	11/9/2023
2023	101	FV	1,229,300	29900	8.567	780,400	2,039,600	2,039,600	Year end	11/3/2022
2022	101	FV	1,118,200	30500	8.567	725,200	1,873,900	1,873,900	Year End Roll	10/19/2021
2021	101	FV	1,098,600	30500	8.567	680,400	1,809,500	1,809,500	Year End Roll	10/15/2020
2020	101	FV	1,141,000	30500	8.567	704,400	1,875,900	1,875,900	Year End Roll	9/26/2019
2019	101	FV	1,106,300	30500	8.567	686,800	1,823,600	1,823,600	Create Final va	6/4/2019
2018	101	FV	1,106,300	30500	8.567	686,800	1,823,600	1,823,600	Year End Roll	9/28/2017

PRINT

Date	Time
09/26/25	17:52:30

LAST REV

Date	Time
06/07/17	15:36:15

apro

USER DEFINED

Prior Id # 1:	84 1 1
Prior Id # 2:	
Prior Id # 3:	
Prior Id # 1:	
Prior Id # 2:	
Prior Id # 3:	
Prior Id # 1:	
Prior Id # 2:	
Prior Id # 3:	
ASR Map:	
Fact Dist:	
Reval Dist:	
Year:	
LandReason:	
BldReason:	
CivilDistrict:	
Ratio:	

SALES INFORMATION

TAX DISTRICT

PAT ACCT. 2113

Grantor	Legal Ref	Type	Date	Sale Code	Sale Price	V	Tst	Verif	Notes
SANDERSON,IAN C	61523-257		4/2/2013	FAMILY	1	No	No		
GILFORD CONSTRU	22816-062		1/11/1993		539,000	No	No		HOME FIN.BEFORE SALE

BUILDING PERMITS

Date	Number	Descrip	Amount	C/O	Last Visit	Fed Code	F. Descrip	Comment
7/3/2000	2017	MANUAL	100,000	C	5/19/2001			kitchen cabinets
2/19/1999	1628	ADDITION	60,000	C	5/31/2000			bedroom 5/31/00
6/27/1996	988-96	MANUAL	370,000	C	7/17/1997			GR + ADD
5/25/1993	247	FINISH B	5,000	C	7/8/1995			

ACTIVITY INFORMATION

Date	Result	By	Name
4/27/2017	MEAS/EXT INS	4	JG
6/26/2008	MEAS/EXT INS	25	D ERSKINE
5/19/2001	MEAS+INSPCTD	614	
5/31/2000	MEAS+INSPCTD	611	
6/5/1999	MEAS+INSPCTD	602	
3/30/1996	MEAS+INSPCTD	606	
7/8/1995	MEAS/EXT INS	600	
4/27/1994	MEAS/EXT INS	600	
1/1/1994	M&L EXTERIOR	600	

Sign: VERIFICATION OF VISIT NOT DATA ___/___/___

LAND SECTION (First 7 lines only)

Use Code	Description	LUC Fact	No of Units	Depth / PriceUnits	Unit Type	Land Type	LT Factor	Base Value	Unit Price	Adj	Neigh	Neigh Influ	Neigh Mod	Infl 1	%	Infl 2	%	Infl 3	%	Appraised Value	Alt Class	%	Spec Land	J Code	Fact	Use Value	Notes
101	ONE FAM		80000		SQUARE FE	PRIME SITE		0	11.98	1.00	R4									958,400						958,400	
101	ONE FAM		6.73		ACRES	UNDEV	0.2	0	35,000.	0.20	R4									47,110						47,100	Wetland

Total AC/HA:	8.56655	Total SF/SM:	373159	Parcel LUC:	101	ONE FAM	Prime NB Desc	RES CAT 4	Total:	1,005,510	Spl Credit		Total:	1,005,500

EXTERIOR INFORMATION

Type:	6 - COLONIAL		
Sty Ht:	2 - 2		
(Liv) Units:	1	Total:	1
Foundation:	1 - CONCRETE		
Frame:	1 - WOOD		
Prime Wall:	2 - CLAPBOARD		
Sec Wall:			%
Roof Struct:	1 - GABLE		
Roof Cover:	1 - ASPHALT		
Color:			
View / Desir:			

GENERAL INFORMATION

Grade:	A - VERY GOOD		
Year Blt:	1993	Eff Yr Blt:	
Alt LUC:		Alt %:	
Jurisdict:		Fact:	.
Const Mod:			
Lump Sum Adj:			

INTERIOR INFORMATION

Avg Ht/FL:	STD		
Prim Int Wal	2 - PLASTER		
Sec Int Wall:			%
Partition:	E - EXTNSIVE		
Prim Floors:	2 - SOFTWOOD		
Sec Floors:			%
Bsmnt Flr:			
Subfloor:			
Bsmnt Gar:			
Electric:	3 - TYPICAL		
Insulation:	2 - TYPICAL		
Int vs Ext:	S		
Heat Fuel:	1 - OIL		
Heat Type:	3 - FORCED H/W		
# Heat Sys:	1		
% Heated:	100	% AC:	100
Solar HW:	NO	Central Vac:	NO
% Com Wal	0	% Sprinkled	0

BATH FEATURES

Full Bath	4	Rating:	AVERAGE
A Bath:		Rating:	
3/4 Bath:		Rating:	
A 3QBth		Rating:	
1/2 Bath:	1	Rating:	AVERAGE
A HBth:		Rating:	
OthrFix:	4	Rating:	AVERAGE

OTHER FEATURES

Kits:	1	Rating:	VERY GOOD
A Kits:		Rating:	
Frpl:	2	Rating:	AVERAGE
WSFlue:		Rating:	

CONDO INFORMATION

Location:	
Total Units:	
Floor:	1 - 1ST FLOOR
% Own:	
Name:	

DEPRECIATION

Phys Cond:	VG - Very Good	7.2	%
Functional:			%
Economic:			%
Special:			%
Override:			%
	Total:	7.2	%

CALC SUMMARY

Basic $ / SQ:	129.00
Size Adj.:	0.89492750
Const Adj.:	1.01999998
Adj $ / SQ:	117.755
Other Features:	93957
Grade Factor:	2.00
NBHD Inf:	1.00000000
NBHD Mod:	
LUC Factor:	1.00
Adj Total:	1430263
Depreciation:	102979
Depreciated Total:	1327284

COMMENTS

INCL R/W 84-1-2 (.42 AC). Finished, heated room above garage. .

RESIDENTIAL GRID

1st Res Grid	Desc:	Line 1	# Units	1

Level	FY	LR	DR	D	K	FR	RR	BR	FB	HB	L	O
Other												
Upper												
Lvl 2												
Lvl 1												
Lower												
Totals	RMs:	13	BRs:	6	Baths:	4	HB	1				

REMODELING

Exterior:	
Interior:	
Additions:	1999
Kitchen:	
Baths:	
Plumbing:	
Electric:	
Heating:	
General:	

RES BREAKDOWN

No Unit	RMS	BRS	FL
1	13	6	
Totals			
1	13	6	

COMPARABLE SALES

Rate	Parcel ID	Typ	Date	Sale Price

WtAv$/SQ:		AvRate:	Ind.Val 1538780.339

Juris. Factor:		Before Depr:	235.51
Special Features:	0	Val/Su Net:	206.13
Final Total:	1327300	Val/Su SzAd	320.60

SKETCH

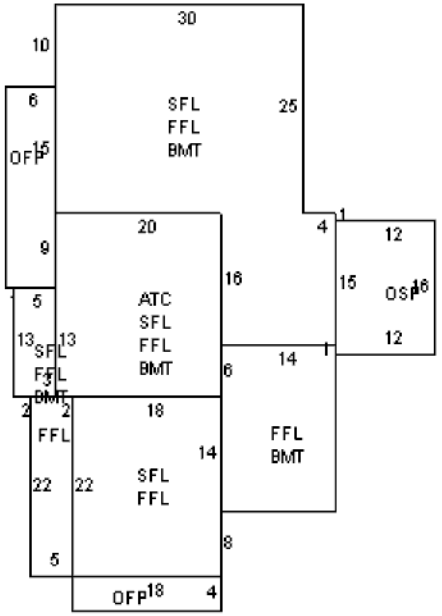

SUB AREA

Code	Description	Area - SQ	Rate - AV	Undepr Value
FFL	1ST FLOOR	2,265	117.750	266,714
SFL	2ND FLOOR	1,875	117.750	220,790
BMT	BASEMENT	1,759	62.560	110,038
OFP	OPEN PORCH	216	16.050	3,467
OSP	SCRN PORCH	192	24.070	4,622
ATC	ATTIC	132	117.750	15,544

Net Sketched Area:	6,439			Total:	621,175
Size Ad	4140	Gross Area	6747	FinArea	5591

SUB AREA DETAIL

Sub Area	% Usbl	Descrip	% Type	Qu	# Ten
BMT	100	FLA	75	A	0

IMAGE

AssessPro Patriot Properties, Inc

MOBILE HOME

Make:		Model:		Serial #		Year:		Color:	

SPEC FEATURES/YARD ITEMS

PARCEL ID 162 44 0

Code	Description	A	Y/S	Qty	Size/Dim	Qual	Con	Year	Unit Price	D/S	Dep	LUC	Fact	NB Fa	Appr Value	JCod	JFact	Juris. Value
4	GARAGE/L	D	Y	1	24X32	V	AV	1997	44.94	B	7.2	101			32,000			32,000

More:	N	Total Yard Items:	32,000	Total Special Featues:	
Total:	32,000				