182	4	0			1 of 1	RESIDENTIAL
Map	Lot	Sublot	Building	Unit	CARD	

Town Of Lincoln

	Total Card	/	Total Parcel
APPRAISED:	1,918,500	/	1,918,500
USE VALUE:	1,918,500	/	1,918,500
ASSESSED:	1,918,500	/	1,918,500

PROPERTY LOCATION

No	Alt No	Direction/Street/City
90		CONANT RD, LINCOLN

OWNERSHIP

Unit #:

Owner 1:	TRANCHINO JESSICA W
Owner 2:	TRANCHINO CHRISTOPER G
Owner 3:	
Street 1:	90 CONANT RD
Street 2:	
Twn/City:	LINCOLN
St/Prov:	MA Cntry Own Occ: Y
Postal:	01773-3913 Type:

PREVIOUS OWNER

Owner 1:	DOYLE - KATHRYN NEAL
Owner 2:	-
Street 1:	90 CONANT RD
Twn/City:	LINCOLN
St/Prov:	MA Cntry
Postal:	01773-3913

NARRATIVE DESCRIPTION

This parcel contains 1.86 ACRES of land mainly classified as ONE FAM with a CONVENT`NL Building built about 1920, having primarily WOOD SHING Exterior and 4567 Square Feet, with 1 Unit, 3 Baths, 0 3/4 Bath, 2 HalfBaths, 11 Rooms, and 4 Bdrms.

OTHER ASSESSMENTS

Code	Descrip/No	Amount	Com. Int

PROPERTY FACTORS

Item	Code	Description	%	Item	Code	Description
Z	R-1	Single Fam	100	water	A	SEPTIC
o				Sewer		
n				Electri		
Census:				Exmpt		
Flood Haz:						
D				Topo		
s				Street	1	PAVED
t				Gas:	4	MEDIUM

IN PROCESS APPRAISAL SUMMARY

Use Code	Land Size	Building Value	Yard Items	Land Value	Total Value
101	1.860	1,118,800	700	799,000	1,918,500
Total Card	1.860	1,118,800	700	799,000	1,918,500
Total Parcel	1.860	1,118,800	700	799,000	1,918,500

Source: Market Adj Cost | Total Value per SQ unit /Card: 420.12 | /Parcel: 420.12

Legal Description

Entered Lot Size
Total Land:
Land Unit Type:

User Acct
GIS Ref
GIS Ref
Insp Date 10/30/18

!232!

PREVIOUS ASSESSMENT

Parcel ID 182 4 0

Tax Yr	Use	Cat	Bldg Value	Yrd Items	Land Size	Land Value	Total Value	Asses'd Value	Notes	Date
2025	101	FV	986,200	600	1.86	775,800	1,762,600		Year End Roll	12/2/2024
2024	101	FV	967,800	600	1.86	760,500	1,728,900		Year end	11/9/2023
2023	101	FV	961,700	600	1.86	700,500	1,662,800	1,662,800	Year end	11/3/2022
2022	101	FV	874,900	900	1.86	633,300	1,509,100	1,509,100	Year End Roll	10/19/2021
2021	101	FV	799,200	900	1.86	560,500	1,360,600	1,360,600	Year End Roll	10/15/2020
2020	101	FV	748,800	900	1.86	560,500	1,310,200	1,310,200	Year End Roll	9/26/2019
2019	101	FV	728,100	900	1.86	542,900	1,271,900	1,271,900	Create Final va	6/4/2019
2018	101	FV	597,000	900	1.86	542,900	1,140,800	1,140,800	Year End Roll	9/28/2017

PRINT

Date	Time
09/26/25	14:22:09

LAST REV

Date	Time
04/25/23	15:29:43
blakeley	

SALES INFORMATION

TAX DISTRICT

PAT ACCT. 232

Grantor	Legal Ref	Type	Date	Sale Code	Sale Price	V	Tst	Verif	Notes
DOYLE,KATHRYN N	73484-315		10/18/2019		1,360,000	No	No		
WOLFF JR,JAMES	69828-535		8/25/2017		1,375,000	No	No		
DAVIS PRESCOTT	16075-475		3/28/1985		235,000	No	No		

USER DEFINED

Prior Id # 1:	109 9 0
Prior Id # 2:	
Prior Id # 3:	
Prior Id # 1:	
Prior Id # 2:	
Prior Id # 3:	
Prior Id # 1:	
Prior Id # 2:	
Prior Id # 3:	
ASR Map:	
Fact Dist:	
Reval Dist:	
Year:	
LandReason:	
BldReason:	
CivilDistrict:	
Ratio:	

BUILDING PERMITS

Date	Number	Descrip	Amount	C/O	Last Visit	Fed Code	F. Descrip	Comment
2/7/2023	R-23-0025	WINDOWS	3,811	C				Replace window at
9/3/2015	6218	ROOF	21,950	C				Strip and re-roof
5/6/2008	3934	TEMPORAR		C				tent 5-16 to 5-19
12/4/2002	2623	RENOVATI	51,500	C	6/27/2003			2 bathrooms
5/8/1998	1413	ADDITION	215,000	C	3/6/1999			

ACTIVITY INFORMATION

Date	Result	By	Name
10/30/2018	MEAS/EXT INS	622	K Cuoco
10/8/2009	MEAS/EXT INS	25	D ERSKINE
6/27/2003	MEAS/EXT INS	615	
6/30/1999	MEAS/EXT INS	602	
3/6/1999	MEAS+INSPCTD	602	
6/4/1998	MEAS/EXT INS	602	
11/17/1995	MEAS+INSPCTD	607	
12/13/1988	INSPECTED	601	

Sign: VERIFICATION OF VISIT NOT DATA ___/___/___

LAND SECTION (First 7 lines only)

Use Code	Description	LUC Fact	No of Units	Depth / PriceUnits	Unit Type	Land Type	LT Factor	Base Value	Unit Price	Adj	Neigh	Neigh Influ	Neigh Mod	Infl 1	%	Infl 2	%	Infl 3	%	Appraised Value	Alt Class	%	Spec Land	J Code	Fact	Use Value	Notes
101	ONE FAM		80000		SQUARE FE	PRIME SITE		0	9.98	1.00	R3									798,400						798,400	
101	ONE FAM		0.013		ACRES	EXCESS ACRE		0	35,000.	1.00	R3									455						500	
101	ONE FAM		0.01		ACRES	UNDEV	0.2	0	35,000.	0.20	R3									70						100	Wetland

Total AC/HA:	1.85955	Total SF/SM:	81002	Parcel LUC:	101	ONE FAM	Prime NB Desc	RES CAT 3	Total:	798,925	Spl Credit		Total:	799,000

EXTERIOR INFORMATION

Type:	22 - CONVENT`NL		
Sty Ht:	2A - 2A		
(Liv) Units:	1	Total:	1
Foundation:	3 - BRK OR STN		
Frame:	1 - WOOD		
Prime Wall:	1 - WOOD SHING		
Sec Wall:	2 - CLAPBOAR	25	%
Roof Struct:	2 - HIP		
Roof Cover:	1 - ASPHALT		
Color:			
View / Desir:			

GENERAL INFORMATION

Grade:	B+ - GOOD (+)		
Year Blt:	1920	Eff Yr Blt:	1998
Alt LUC:		Alt %:	
Jurisdict:		Fact:	.
Const Mod:			
Lump Sum Adj:			

INTERIOR INFORMATION

Avg Ht/FL:	STD		
Prim Int Wal	1 - DRYWALL		
Sec Int Wall:			%
Partition:	T - TYPICAL		
Prim Floors:	3 - HARDWOOD		
Sec Floors:			%
Bsmnt Flr:			
Subfloor:			
Bsmnt Gar:			
Electric:	3 - TYPICAL		
Insulation:	2 - TYPICAL		
Int vs Ext:	S		
Heat Fuel:	1 - OIL		
Heat Type:	3 - FORCED H/W		
# Heat Sys:	1		
% Heated:	100	% AC:	30
Solar HW:	NO	Central Vac:	NO
% Com Wal	0	% Sprinkled	0

BATH FEATURES

Full Bath	3	Rating:	GOOD
A Bath:		Rating:	
3/4 Bath:		Rating:	
A 3QBth		Rating:	
1/2 Bath:	2	Rating:	AVERAGE
A HBth:		Rating:	
OthrFix:	2	Rating:	AVERAGE

OTHER FEATURES

Kits:	1	Rating:	VERY GOOD
A Kits:		Rating:	
Frpl:	1	Rating:	AVERAGE
WSFlue:		Rating:	

CONDO INFORMATION

Location:	
Total Units:	
Floor:	1 - 1ST FLOOR
% Own:	
Name:	

DEPRECIATION

Phys Cond:	VG - Very Good	6.0	%
Functional:			%
Economic:			%
Special:			%
Override:			%
Total:		6	%

CALC SUMMARY

Basic $ / SQ:	150.00
Size Adj.:	0.92311025
Const Adj.:	1.00979996
Adj $ / SQ:	139.824
Other Features:	93729
Grade Factor:	1.60
NBHD Inf:	1.00000000
NBHD Mod:	
LUC Factor:	1.00
Adj Total:	1190243
Depreciation:	71415
Depreciated Total:	1118829

COMMENTS

RESIDENTIAL GRID

1st Res Grid	Desc:	Line 1	# Units	1

Level	FY	LR	DR	D	K	FR	RR	BR	FB	HB	L	O
Other												
Upper												
Lvl 2												
Lvl 1												
Lower												

Totals	RMs:	11	BRs:	4	Baths:	3	HB	2

REMODELING

Exterior:	
Interior:	
Additions:	1998
Kitchen:	
Baths:	
Plumbing:	
Electric:	
Heating:	
General:	

RES BREAKDOWN

No Unit	RMS	BRS	FL
1	11	4	
Totals			
1	11	4	

COMPARABLE SALES

Rate	Parcel ID	Typ	Date	Sale Price

WtAv$/SQ:		AvRate:		Ind.Val	979178.6885

Juris. Factor:		Before Depr:	223.72
Special Features:	0	Val/Su Net:	173.62
Final Total:	1118800	Val/Su SzAd	322.79

SKETCH

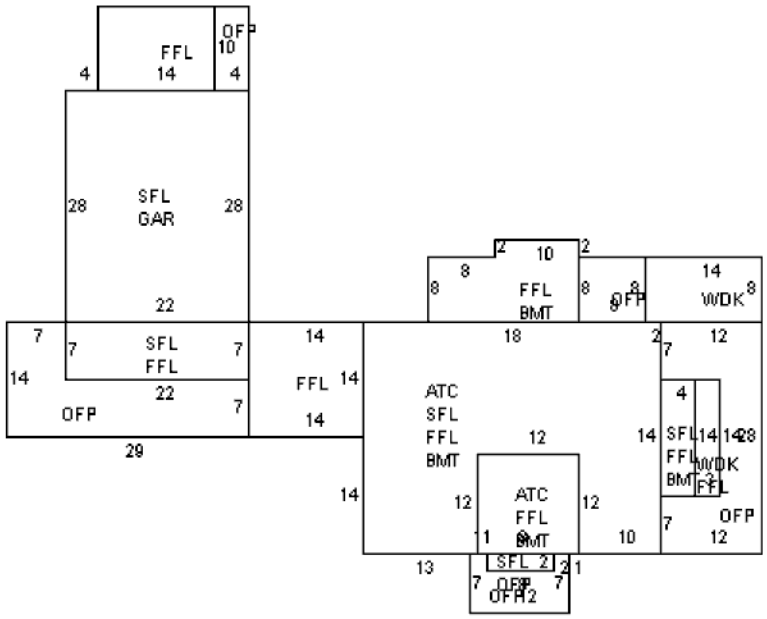

SUB AREA

Code	Description	Area - SQ	Rate - AV	Undepr Value
FFL	1ST FLOOR	1,760	139.820	246,089
SFL	2ND FLOOR	1,706	139.820	238,539
BMT	BASEMENT	1,228	69.040	84,778
OFP	OPEN PORCH	678	16.050	10,882
GAR	GARAGE	616	38.520	23,728
ATC	ATTIC	302	139.820	42,283
WDK	WOOD DECK	154	25.150	3,873

Net Sketched Area:	6,444			Total:	650,172
Size Ad	3466	Gross Area	7150	FinArea	4567

SUB AREA DETAIL

Sub Area	% Usbl	Descrip	% Type	Qu	# Ten
BMT	100	FLA	65	A	0

MOBILE HOME

Make:		Model:		Serial #		Year:		Color:	

SPEC FEATURES/YARD ITEMS

Code	Description	A	Y/S	Qty	Size/Dim	Qual	Con	Year	Unit Price	D/S	Dep	LUC	Fact	NB Fa	Appr Value	JCod	JFact	Juris. Value
2	SHED/FR	D	Y	1	12X12	A	AV	1985	16.05	T	70	101			700			700

More:	N	Total Yard Items:	700	Total Special Featues:	
Total:	700				

PARCEL ID

182 4 0

IMAGE

AssessPro Patriot Properties, Inc