Map	Lot	Sublot	Building	Unit	CARD
110	1	0			1 of 1

RESIDENTIAL

Town Of Lincoln

	Total Card	/	Total Parcel
APPRAISED:	1,015,700	/	1,015,700
USE VALUE:	1,015,700	/	1,015,700
ASSESSED:	1,015,700	/	1,015,700

PROPERTY LOCATION

No	Alt No	Direction/Street/City
26		BYPASS RD, LINCOLN

OWNERSHIP

Unit #:

Owner 1:	TAYLOR TR ERNEST J
Owner 2:	THE 26 BYPASS ROAD TRUST
Owner 3:	
Street 1:	PO BOX 597
Street 2:	
Twn/City:	LINCOLN
St/Prov:	MA Cntry Own Occ: Y
Postal:	01773 Type:

PREVIOUS OWNER

Owner 1:	MRAKOVICH TR - DAVID V
Owner 2:	c/o ERNEST J TAYLOR -
Street 1:	PO BOX 597
Twn/City:	LINCOLN
St/Prov:	MA Cntry
Postal:	01773

NARRATIVE DESCRIPTION

This parcel contains 2.2 ACRES of land mainly classified as ONE FAM with a RANCH Building built about 1959, having primarily CLAPBOARD Exterior and 2337 Square Feet, with 1 Unit, 3 Baths, 0 3/4 Bath, 0 HalfBath, 6 Rooms, and 3 Bdrms.

OTHER ASSESSMENTS

Code	Descrip/No	Amount	Com. Int

PROPERTY FACTORS

Item	Code	Description	%	Item	Code	Description
Z	R-1	Single Fam	100	water	A	SEPTIC
o				Sewer		
n				Electri		
Census:				Exmpt		
Flood Haz:						
D				Topo		
s				Street	1	PAVED
t				Gas:	4	MEDIUM

IN PROCESS APPRAISAL SUMMARY

Use Code	Land Size	Building Value	Yard Items	Land Value	Total Value
101	2.200	301,600	600	713,500	1,015,700
Total Card	2.200	301,600	600	713,500	1,015,700
Total Parcel	2.200	301,600	600	713,500	1,015,700

Source: Market Adj Cost | Total Value per SQ unit /Card: 434.54 | /Parcel: 434.54

Legal Description

User Acct

GIS Ref

GIS Ref

Insp Date 12/13/24

Entered Lot Size

Total Land:

Land Unit Type:

Patriot Properties Inc.

PREVIOUS ASSESSMENT

Parcel ID 110 1 0

!723!

Tax Yr	Use	Cat	Bldg Value	Yrd Items	Land Size	Land Value	Total Value	Asses'd Value	Notes	Date
2025	101	FV	284,800	600	2.2	706,300	991,700		Year End Roll	12/2/2024
2024	101	FV	278,000	600	2.2	690,900	969,500		Year end	11/9/2023
2023	101	FV	255,900	600	2.2	650,900	907,400	907,400	Year end	11/3/2022
2022	101	FV	223,200	600	2.2	590,900	814,700	814,700	Year End Roll	10/19/2021
2021	101	FV	205,800	600	2.2	510,900	717,300	717,300	Year End Roll	10/15/2020
2020	101	FV	204,000	600	2.2	518,900	723,500	723,500	Year End Roll	9/26/2019
2019	101	FV	186,600	600	2.2	502,100	689,300	689,300	Create Final va	6/4/2019
2018	101	FV	186,600	600	2.2	502,100	689,300	689,300	Year End Roll	9/28/2017

PRINT

Date	Time
09/26/25	15:07:30

LAST REV

Date	Time
02/13/25	10:38:32
blakeley	

USER DEFINED

Prior Id # 1:	13 13 0
Prior Id # 2:	
Prior Id # 3:	
Prior Id # 1:	
Prior Id # 2:	
Prior Id # 3:	
Prior Id # 1:	
Prior Id # 2:	
Prior Id # 3:	
ASR Map:	
Fact Dist:	
Reval Dist:	
Year:	
LandReason:	
BldReason:	
CivilDistrict:	
Ratio:	

SALES INFORMATION

TAX DISTRICT

PAT ACCT. 723

Grantor	Legal Ref	Type	Date	Sale Code	Sale Price	V	Tst	Verif	Notes
MRAKOVICH TR,DA	83678-18		1/14/2025	CONVENIENC	1	No	No		
MRAKOVICH DAVID	54768-476		6/2/2010	FAMILY	100	No	No		
MCGRATH, JAMES	11582-454		10/1/1968		45,000	No	No		

BUILDING PERMITS

Date	Number	Descrip	Amount	C/O	Last Visit	Fed Code	F. Descrip	Comment
8/27/2013	5532	DEMOLITI		C	5/20/2014			demo inground pool

ACTIVITY INFORMATION

Date	Result	By	Name
12/13/2024	MEAS/EXT INS	6	JN
5/20/2014	MEAS/EXT INS	25	D ERSKINE
10/27/2009	MEAS/EXT INS	25	D ERSKINE
11/20/2004	M&L COMPLETE	615	
12/21/1995	MEAS+INSPCTD	606	

Sign: VERIFICATION OF VISIT NOT DATA ___/___/___

LAND SECTION (First 7 lines only)

Use Code	Description	LUC Fact	No of Units	Depth / PriceUnits	Unit Type	Land Type	LT Factor	Base Value	Unit Price	Adj	Neigh	Neigh Influ	Neigh Mod	Infl 1	%	Infl 2	%	Infl 3	%	Appraised Value	Alt Class	%	Spec Land	J Code	Fact	Use Value	Notes
101	ONE FAM		80000		SQUARE FE	PRIME SITE		0	8.76	1.00	R2									700,800						700,800	
101	ONE FAM		0.363		ACRES	EXCESS ACRE		0	35,000.	1.00	R2									12,705						12,700	

Total AC/HA:	2.19955	Total SF/SM:	95812	Parcel LUC:	101	ONE FAM	Prime NB Desc	RES CAT 2	Total:	713,505	Spl Credit		Total:	713,500

EXTERIOR INFORMATION

Type:	19 - RANCH		
Sty Ht:	1 - 1		
(Liv) Units:	1	Total:	1
Foundation:	1 - CONCRETE		
Frame:	1 - WOOD		
Prime Wall:	2 - CLAPBOARD		
Sec Wall:	16 - STONE VE	25	%
Roof Struct:	1 - GABLE		
Roof Cover:	1 - ASPHALT		
Color:			
View / Desir:			

BATH FEATURES

Full Bath	3	Rating:	AVERAGE
A Bath:		Rating:	
3/4 Bath:		Rating:	
A 3QBth		Rating:	
1/2 Bath:		Rating:	
A HBth:		Rating:	
OthrFix:	1	Rating:	AVERAGE

OTHER FEATURES

Kits:	1	Rating:	AVERAGE
A Kits:		Rating:	
Frpl:	2	Rating:	AVERAGE
WSFlue:	1	Rating:	AVERAGE

COMMENTS

SKETCH

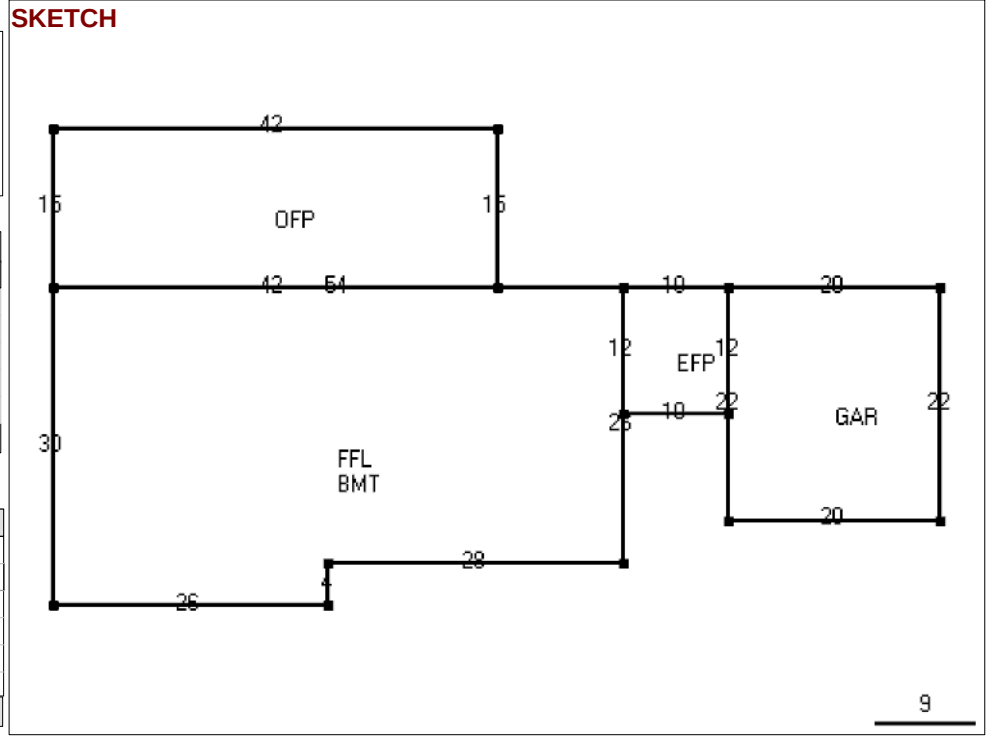

GENERAL INFORMATION

Grade:	C - AVERAGE		
Year Blt:	1959	Eff Yr Blt:	
Alt LUC:		Alt %:	
Jurisdict:		Fact:	.
Const Mod:			
Lump Sum Adj:			

CONDO INFORMATION

Location:	
Total Units:	
Floor:	1 - 1ST FLOOR
% Own:	
Name:	

RESIDENTIAL GRID

1st Res Grid	Desc:	Line 1	# Units	1

Level	FY	LR	DR	D	K	FR	RR	BR	FB	HB	L	O
Other												
Upper												
Lvl 2												
Lvl 1												
Lower												
Totals	RMs:	6	BRs:	3	Baths:	3	HB					

INTERIOR INFORMATION

Avg Ht/FL:	STD		
Prim Int Wal	2 - PLASTER		
Sec Int Wall:			%
Partition:	T - TYPICAL		
Prim Floors:	3 - HARDWOOD		
Sec Floors:			%
Bsmnt Flr:			
Subfloor:			
Bsmnt Gar:			
Electric:	3 - TYPICAL		
Insulation:	2 - TYPICAL		
Int vs Ext:	S		
Heat Fuel:	1 - OIL		
Heat Type:	3 - FORCED H/W		
# Heat Sys:	1		
% Heated:	100	% AC:	0
Solar HW:	NO	Central Vac:	NO
% Com Wal	0	% Sprinkled	0

DEPRECIATION

Phys Cond:	AV - Average	31.	%
Functional:			%
Economic:			%
Special:			%
Override:			%
	Total:	31.5	%

REMODELING

Exterior:	
Interior:	
Additions:	
Kitchen:	
Baths:	
Plumbing:	
Electric:	
Heating:	
General:	

RES BREAKDOWN

No Unit	RMS	BRS	FL
1	6	3	
Totals			
1	6	3	

CALC SUMMARY

Basic $ / SQ:	144.00
Size Adj.:	1.14787793
Const Adj.:	1.03530002
Adj $ / SQ:	171.129
Other Features:	50500
Grade Factor:	1.00
NBHD Inf:	1.00000000
NBHD Mod:	
LUC Factor:	1.00
Adj Total:	440245
Depreciation:	138677
Depreciated Total:	301568

COMPARABLE SALES

Rate	Parcel ID	Typ	Date	Sale Price

WtAv$/SQ:		AvRate:		Ind.Val	673430.3822

Juris. Factor:		Before Depr:	171.13
Special Features:	0	Val/Su Net:	71.71
Final Total:	301600	Val/Su SzAd	200.00

SUB AREA

Code	Description	Area - SQ	Rate - AV	Undepr Value
BMT	BASEMENT	1,508	66.310	99,999
FFL	1ST FLOOR	1,508	171.130	258,063
OFP	OPEN PORCH	630	16.050	10,112
GAR	GARAGE	440	38.520	16,949
EFP	ENCL PORCH	120	38.520	4,622

Net Sketched Area:	4,206			Total:	389,744
Size Ad	1508	Gross Area	4206	FinArea	2337

SUB AREA DETAIL

Sub Area	% Usbl	Descrip	% Type	Qu	# Ten
BMT	100	RRM	55	A	0

IMAGE

AssessPro Patriot Properties, Inc

MOBILE HOME

Make:		Model:		Serial #		Year:		Color:	

SPEC FEATURES/YARD ITEMS

PARCEL ID 110 1 0

Code	Description	A	Y/S	Qty	Size/Dim	Qual	Con	Year	Unit Price	D/S	Dep	LUC	Fact	NB Fa	Appr Value	JCod	JFact	Juris. Value
2	SHED/FR	D	Y	1	8X10	A	AV	1970	16.05	T	70	101			400			400
2	SHED/FR	D	Y	1	6X8	A	AV	1970	16.05	T	70	101			200			200

More:	N	Total Yard Items:	600	Total Special Featues:		Total:	600