Map	Lot	Sublot	Building	Unit	CARD
121	16	0			1 of 1

RESIDENTIAL

Town Of Lincoln

	Total Card	/	Total Parcel
APPRAISED:	2,462,400	/	2,462,400
USE VALUE:	2,462,400	/	2,462,400
ASSESSED:	2,462,400	/	2,462,400

PROPERTY LOCATION

No	Alt No	Direction/Street/City
4		GARLAND RD, LINCOLN

OWNERSHIP

Unit #:

Owner 1:	GOLDMACHER KIMBERLY A
Owner 2:	GOLDMACHER GREGORY V
Owner 3:	
Street 1:	4 GARLAND RD
Street 2:	
Twn/City:	LINCOLN
St/Prov:	MA Cntry Own Occ: Y
Postal:	01773-1800 Type:

PREVIOUS OWNER

Owner 1:	WOLFSBERG - SONJA A
Owner 2:	-
Street 1:	4 GARLAND RD
Twn/City:	LINCOLN
St/Prov:	MA Cntry
Postal:	01773-1800

NARRATIVE DESCRIPTION

This parcel contains 1.8 ACRES of land mainly classified as ONE FAM with a COLONIAL Building built about 1993, having primarily CLAPBOARD Exterior and 6355 Square Feet, with 1 Unit, 4 Baths, 0 3/4 Bath, 2 HalfBaths, 10 Rooms, and 4 Bdrms.

OTHER ASSESSMENTS

Code	Descrip/No	Amount	Com. Int

PROPERTY FACTORS

Item	Code	Description	%	Item	Code	Description
Z	R-1	Single Fam	100	water	A	SEPTIC
o				Sewer		
n				Electri		
Census:				Exmpt		
Flood Haz:						
D				Topo		
s				Street	1	PAVED
t				Gas:	4	MEDIUM

IN PROCESS APPRAISAL SUMMARY

Use Code	Land Size	Building Value	Yard Items	Land Value	Total Value
101	1.800	1,495,200	14,600	952,600	2,462,400
Total Card	1.800	1,495,200	14,600	952,600	2,462,400
Total Parcel	1.800	1,495,200	14,600	952,600	2,462,400

Source: Market Adj Cost | Total Value per SQ unit /Card: 387.45 | /Parcel: 387.45

Legal Description

User Acct

GIS Ref

GIS Ref

Insp Date 08/05/13

Entered Lot Size

Total Land:

Land Unit Type:

Patriot Properties Inc.

PREVIOUS ASSESSMENT

Parcel ID 121 16 0

!996!

Tax Yr	Use	Cat	Bldg Value	Yrd Items	Land Size	Land Value	Total Value	Asses'd Value	Notes	Date
2025	101	FV	1,446,800	13700	1.8	924,800	2,385,300		Year End Roll	12/2/2024
2024	101	FV	1,391,800	13700	1.8	906,500	2,312,000		Year end	11/9/2023
2023	101	FV	1,381,900	13700	1.8	735,500	2,131,100	2,131,100	Year end	11/3/2022
2022	101	FV	1,228,700	6000	1.8	680,700	1,915,400	1,915,400	Year End Roll	10/19/2021
2021	101	FV	1,378,900	6000	1.8	636,100	2,021,000	2,021,000	Year End Roll	10/15/2020
2020	101	FV	1,509,000	6000	1.8	660,000	2,175,000	2,175,000	Year End Roll	9/26/2019
2019	101	FV	1,511,300	6000	1.8	642,500	2,159,800	2,159,800	Create Final va	6/4/2019
2018	101	FV	1,511,300	6000	1.8	642,500	2,159,800	2,159,800	Year End Roll	9/28/2017

PRINT

Date	Time
09/26/25	15:37:53

LAST REV

Date	Time
11/23/21	15:49:00

apro

USER DEFINED

Prior Id # 1:	25 20 1
Prior Id # 2:	
Prior Id # 3:	
Prior Id # 1:	
Prior Id # 2:	
Prior Id # 3:	
Prior Id # 1:	
Prior Id # 2:	
Prior Id # 3:	
ASR Map:	
Fact Dist:	
Reval Dist:	
Year:	
LandReason:	
BldReason:	
CivilDistrict:	
Ratio:	

SALES INFORMATION

TAX DISTRICT

PAT ACCT. 996

Grantor	Legal Ref	Type	Date	Sale Code	Sale Price	V	Tst	Verif	Notes
WOLFSBERG,SONJA	1559-57		6/29/2020		1,837,500	No	No		
WOLFSBERG JAMES	1279-111		1/8/2004	CONVENIENC	100	Yes	No		
WB+T REALTY COR	1097-136		7/10/1992		250,000	Yes	No		NEW HOME AFTER SALE

BUILDING PERMITS

Date	Number	Descrip	Amount	C/O	Last Visit	Fed Code	F. Descrip	Comment
6/15/2021	R-21-0124	FENCE	10,000	C				Install fence per
12/9/2020	R-20-0222	MANUAL	12,000	C	12/18/2020			Weatherization/air
11/13/2020	R-20-0207	SOLAR PA	47,113	C				Install 30 roof mo
4/16/1999	1683	POOL	18,000	C	5/31/2000			5/31/00 100%
4/14/1999	1676	POOL HOU	87,000	C	5/31/2000			5/31/00 100%
11/19/1996	1091-96	FINISH B	55,000	C	7/2/1997			

ACTIVITY INFORMATION

Date	Result	By	Name
11/23/2021	INFO FR MLS	625	J Frank
8/5/2013	MEAS/EXT INS	25	D ERSKINE
5/12/2007	MEAS/EXT INS	616	D MANZELLO
5/31/2000	MEAS+INSPCTD	610	
5/29/1999	MEAS/EXT INS	602	
7/2/1997	MEAS+INSPCTD	602	
6/14/1994	FIELDREV CHG	600	
1/18/1994	INSPECTED	600	

Sign: VERIFICATION OF VISIT NOT DATA ___/___/___

LAND SECTION (First 7 lines only)

Use Code	Description	LUC Fact	No of Units	Depth / PriceUnits	Unit Type	Land Type	LT Factor	Base Value	Unit Price	Adj	Neigh	Neigh Influ	Neigh Mod	Infl 1	%	Infl 2	%	Infl 3	%	Appraised Value	Alt Class	%	Spec Land	J Code	Fact	Use Value	Notes
101	ONE FAM		78388.28		SQUARE FE	PRIME SITE		0	11.98	1.01	R4									952,605						952,600	

Total AC/HA:	1.79955	Total SF/SM:	78388	Parcel LUC:	101	ONE FAM	Prime NB Desc	RES CAT 4	Total:	952,605	Spl Credit		Total:	952,600

EXTERIOR INFORMATION

Type:	6 - COLONIAL		
Sty Ht:	2 - 2		
(Liv) Units:	1	Total:	1
Foundation:	1 - CONCRETE		
Frame:	1 - WOOD		
Prime Wall:	2 - CLAPBOARD		
Sec Wall:	8 - BRICK VEN	25	%
Roof Struct:	2 - HIP		
Roof Cover:	1 - ASPHALT		
Color:			
View / Desir:			

BATH FEATURES

Full Bath	4	Rating:	AVERAGE
A Bath:		Rating:	
3/4 Bath:		Rating:	
A 3QBth		Rating:	
1/2 Bath:	2	Rating:	AVERAGE
A HBth:		Rating:	
OthrFix:	4	Rating:	AVERAGE

OTHER FEATURES

Kits:	1	Rating:	AVERAGE
A Kits:		Rating:	
Frpl:	4	Rating:	AVERAGE
WSFlue:		Rating:	

COMMENTS

GENERAL INFORMATION

Grade:	A - VERY GOOD		
Year Blt:	1993	Eff Yr Blt:	
Alt LUC:		Alt %:	
Jurisdict:		Fact:	.
Const Mod:			
Lump Sum Adj:			

CONDO INFORMATION

Location:	
Total Units:	
Floor:	1 - 1ST FLOOR
% Own:	
Name:	

RESIDENTIAL GRID

1st Res Grid	Desc:	Line 1	# Units	1

Level	FY	LR	DR	D	K	FR	RR	BR	FB	HB	L	O
Other												
Upper												
Lvl 2												
Lvl 1												
Lower												
Totals	RMs:	10	BRs:	4	Baths:	4	HB	2				

SKETCH

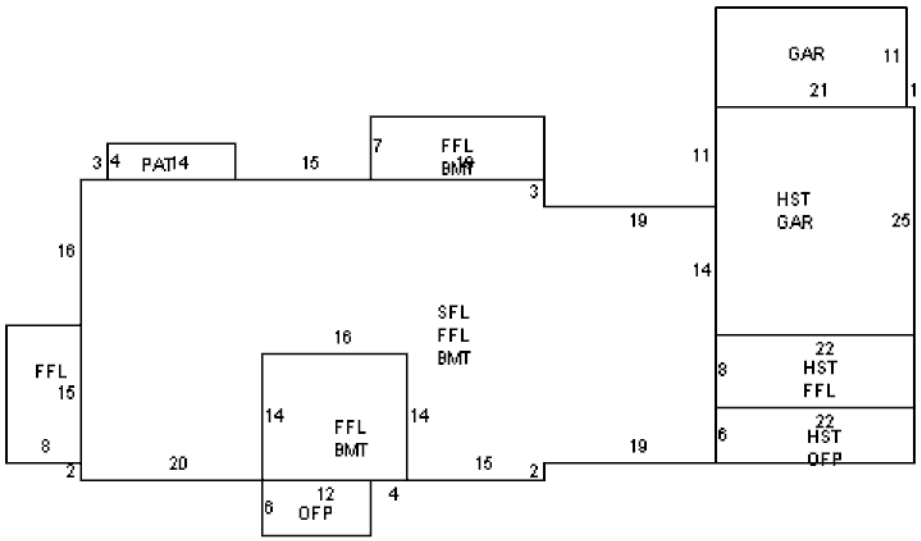

INTERIOR INFORMATION

Avg Ht/FL:	STD		
Prim Int Wal	2 - PLASTER		
Sec Int Wall:			%
Partition:	T - TYPICAL		
Prim Floors:	3 - HARDWOOD		
Sec Floors:			%
Bsmnt Flr:			
Subfloor:			
Bsmnt Gar:			
Electric:	3 - TYPICAL		
Insulation:	2 - TYPICAL		
Int vs Ext:	S		
Heat Fuel:	2 - GAS		
Heat Type:	3 - FORCED H/W		
# Heat Sys:	1		
% Heated:	100	% AC:	100
Solar HW:	NO	Central Vac:	Yes
% Com Wal	0	% Sprinkled	0

DEPRECIATION

Phys Cond:	GD - Good	10.	%
Functional:			%
Economic:			%
Special:			%
Override:			%
	Total:	10.1	%

REMODELING

Exterior:	
Interior:	
Additions:	
Kitchen:	
Baths:	
Plumbing:	
Electric:	
Heating:	
General:	

RES BREAKDOWN

No Unit	RMS	BRS	FL
1	10	4	1
Totals			
1	10	4	

CALC SUMMARY

Basic $ / SQ:	129.00
Size Adj.:	0.86848342
Const Adj.:	1.03275001
Adj $ / SQ:	115.703
Other Features:	84795
Grade Factor:	2.00
NBHD Inf:	1.00000000
NBHD Mod:	
LUC Factor:	1.00
Adj Total:	1657731
Depreciation:	167431
Depreciated Total:	1490300

COMPARABLE SALES

Rate	Parcel ID	Typ	Date	Sale Price

WtAv$/SQ:		AvRate:		Ind.Val	1864571.734

Juris. Factor:		Before Depr:	231.41
Special Features:	4900	Val/Su Net:	176.88
Final Total:	1495200	Val/Su SzAd	295.26

SUB AREA

Code	Description	Area - SQ	Rate - AV	Undepr Value
FFL	1ST FLOOR	2,644	115.700	305,920
BMT	BASEMENT	2,348	52.790	123,950
SFL	2ND FLOOR	1,991	115.700	230,366
GAR	GARAGE	781	38.520	30,084
HST	HALF STORY	429	115.700	49,637
OFP	OPEN PORCH	204	16.050	3,274
PAT	PATIO	56	14.980	839
	Net Sketched Area:	8,453	Total:	744,070
Size Ad	5064	Gross Area	8882	FinArea	6355

SUB AREA DETAIL

Sub Area	% Usbl	Descrip	% Type	Qu	# Ten
BMT	100	FLA	55	A	0

MOBILE HOME

Make:		Model:		Serial #		Year:		Color:	

SPEC FEATURES/YARD ITEMS

Code	Description	A	Y/S	Qty	Size/Dim	Qual	Con	Year	Unit Price	D/S	Dep	LUC	Fact	NB Fa	Appr Value	JCod	JFact	Juris. Value
96	WHIRL PL	M	S	1	2	A	AV	1993	2,700.00	B	10.1	101			4,900			4,900
12	POOL I-G	D	Y	1	22X42	V	FR	1999	35.31	T	65	101			11,400			11,400
23	BATH HSE	D	Y	1	264	E	AV	1999	187.25	T	34.5	101			3,200			3,200

More:	N	Total Yard Items:	14,600	Total Special Featues:	4,900	Total:	19,500

PARCEL ID

121 16 0

IMAGE

AssessPro Patriot Properties, Inc